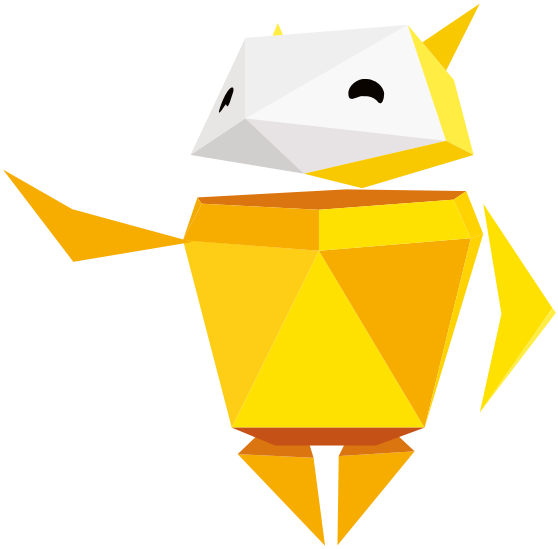

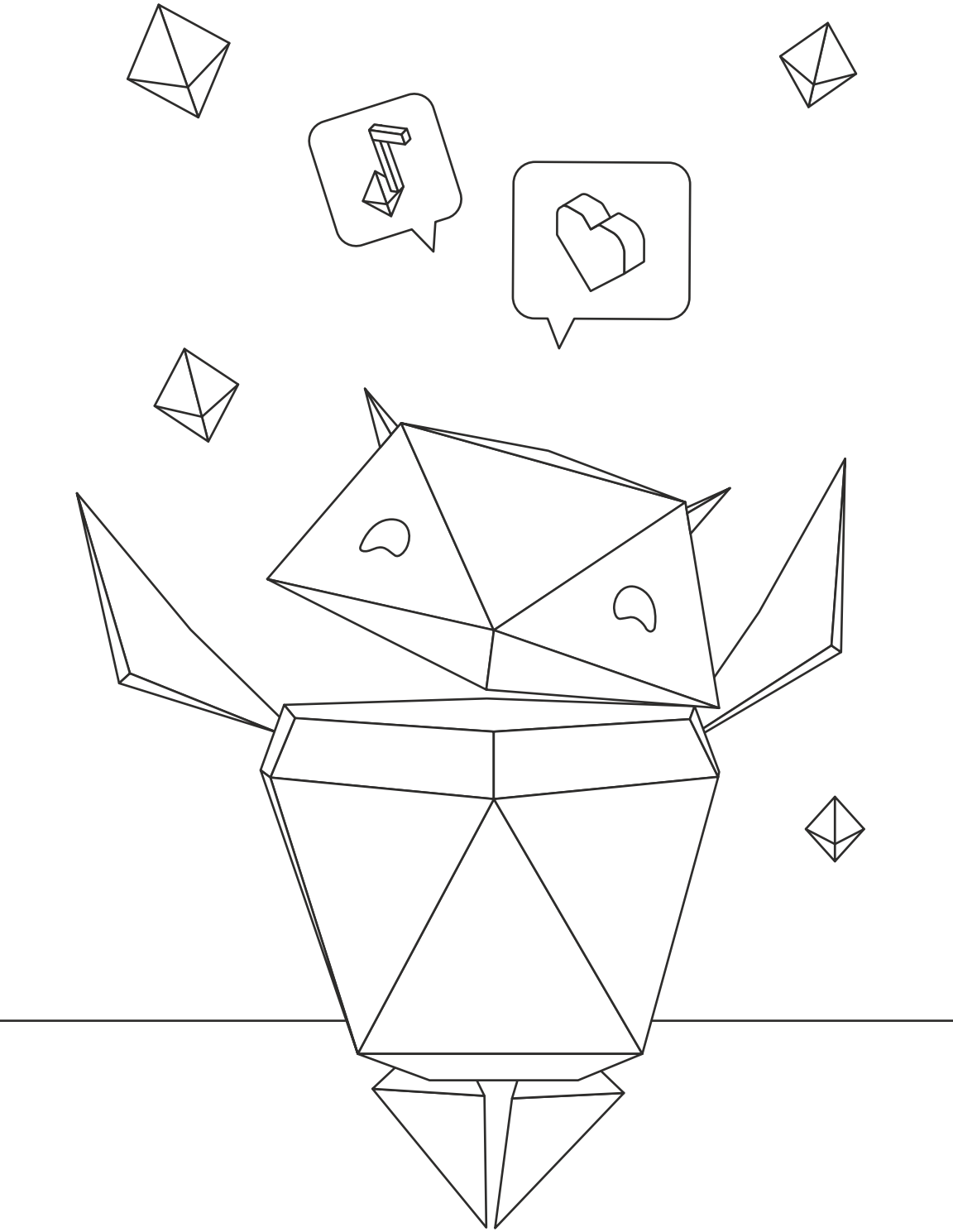

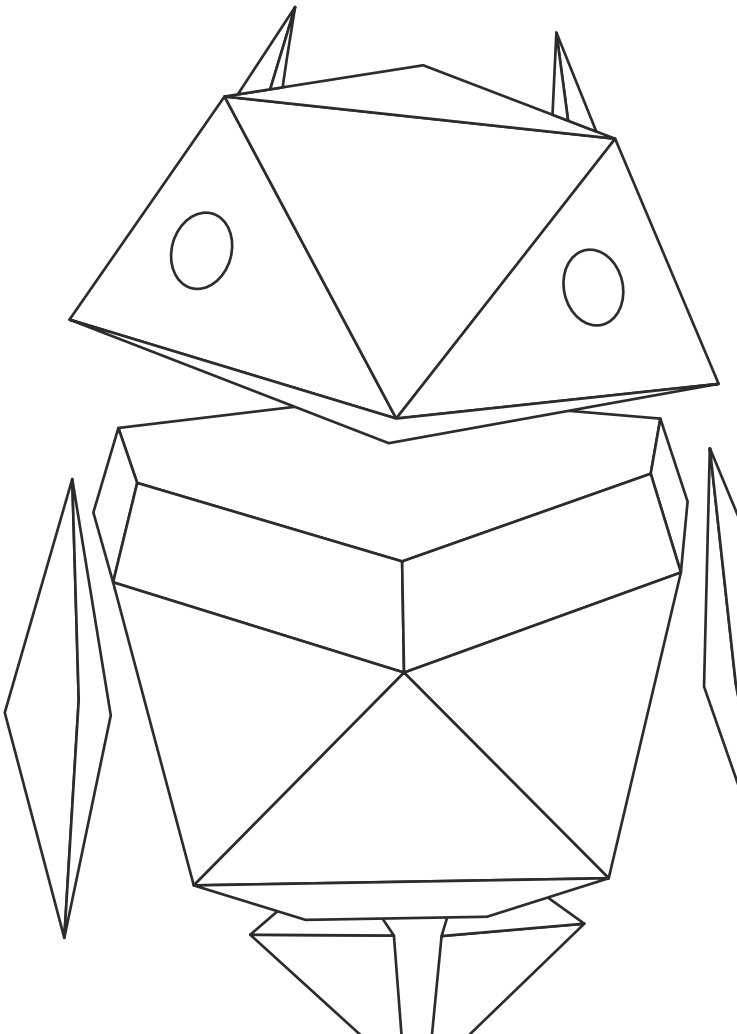

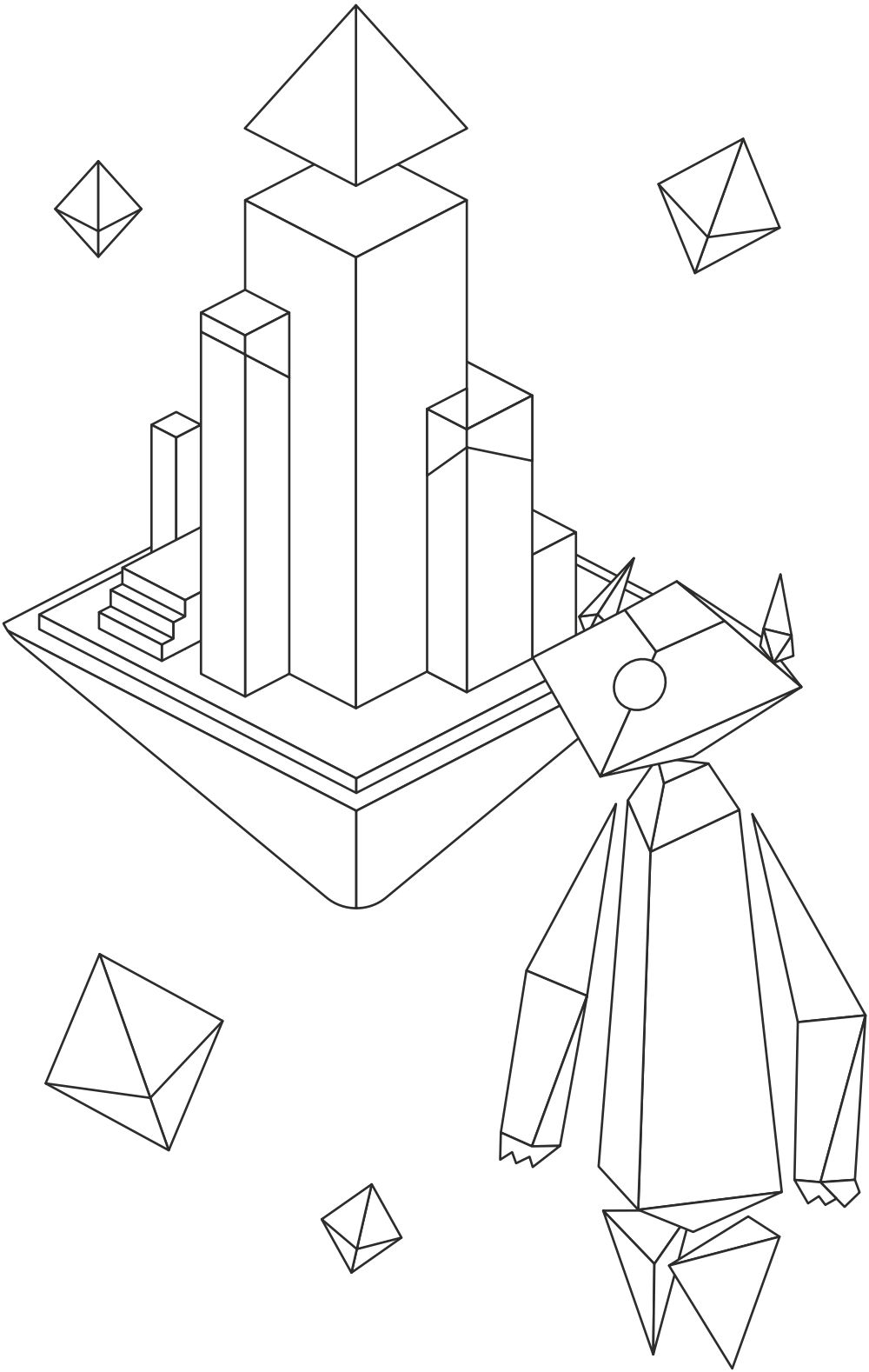

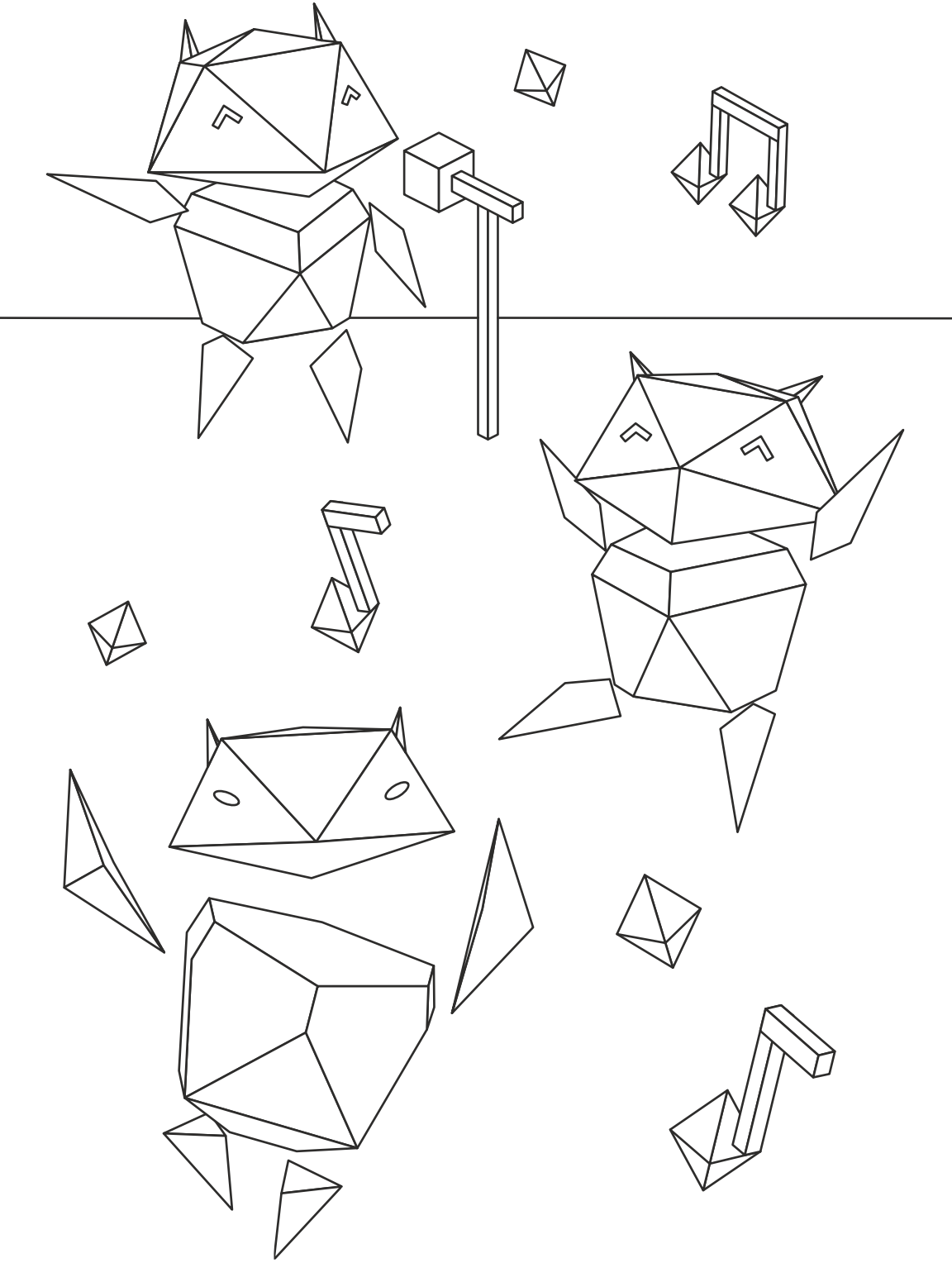

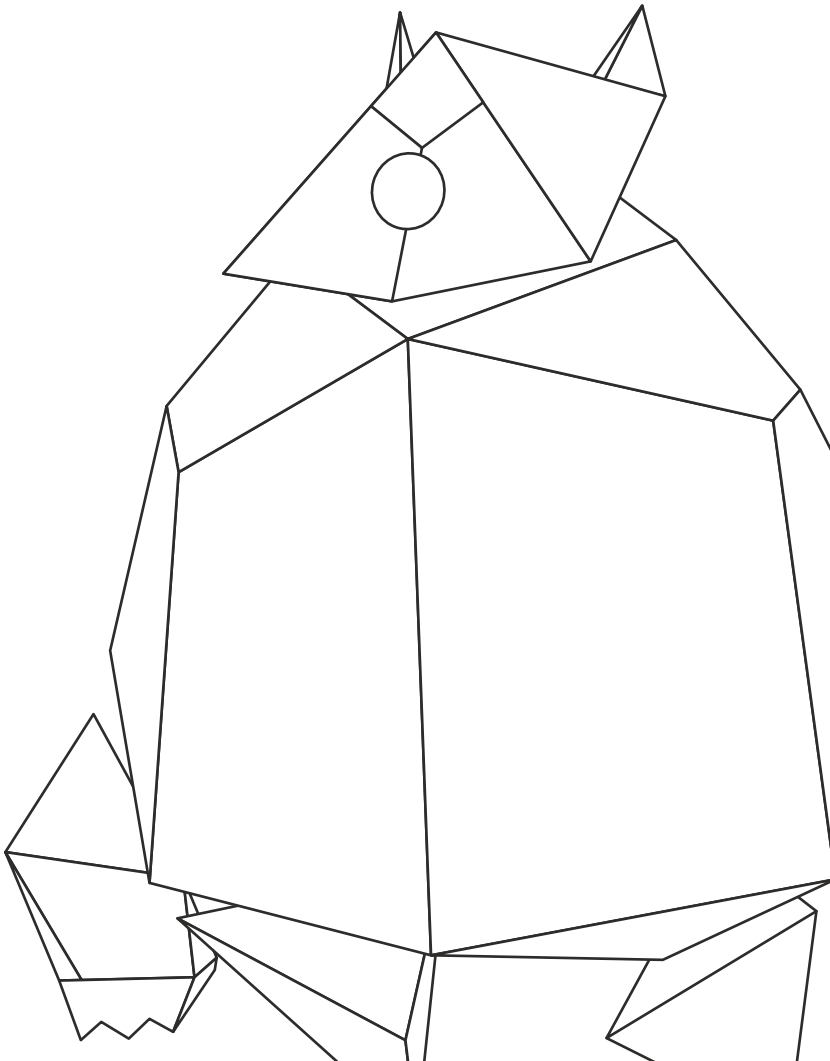

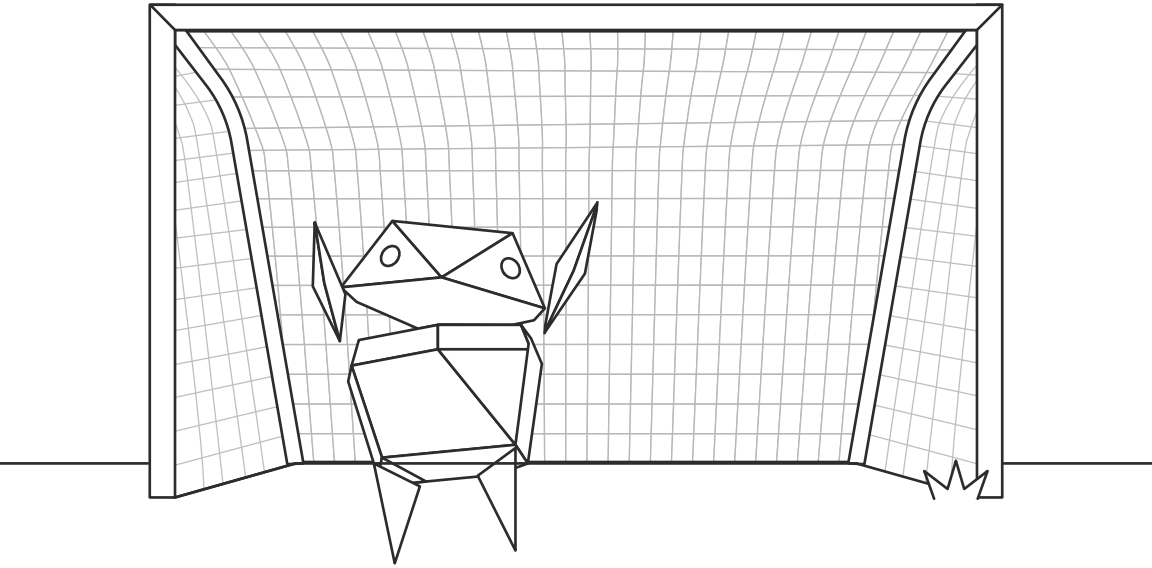

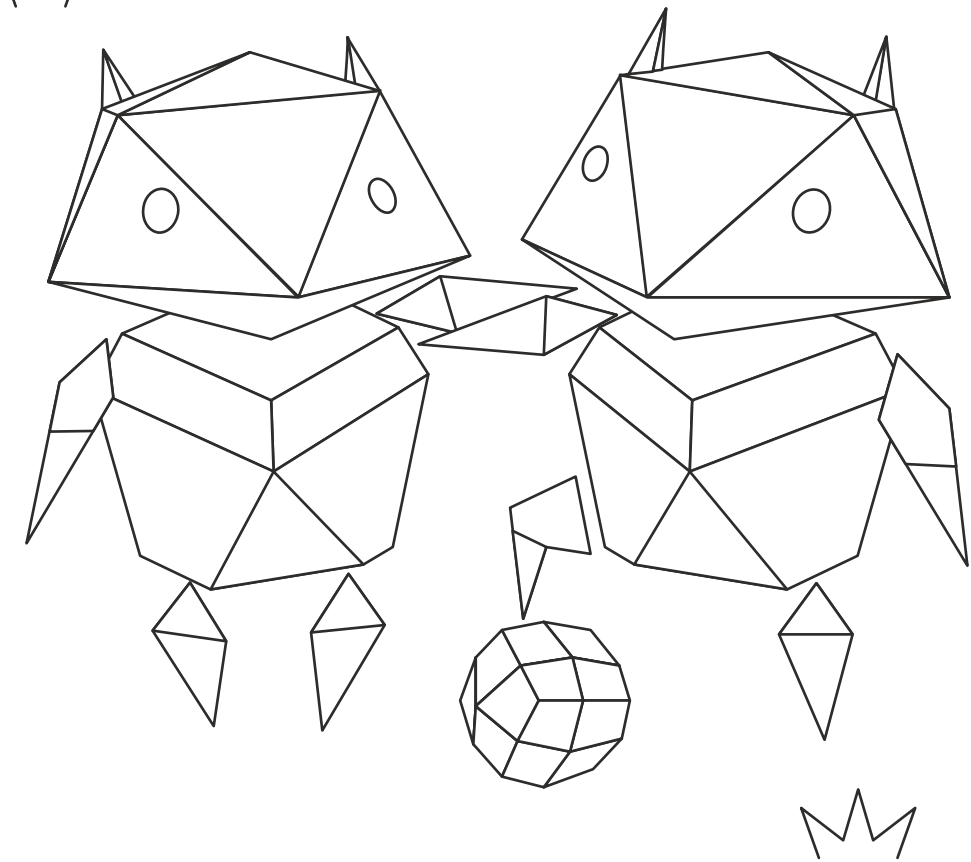

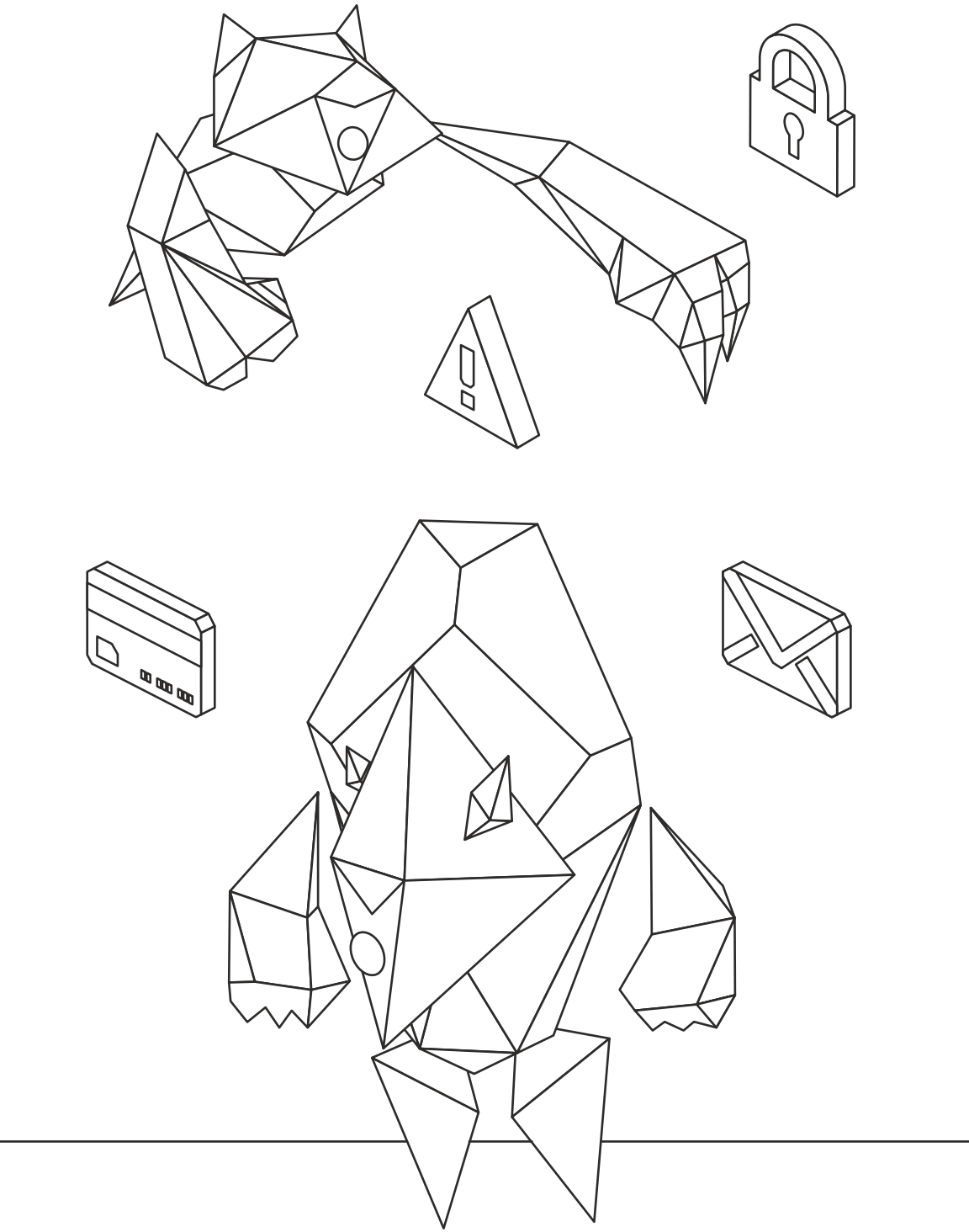

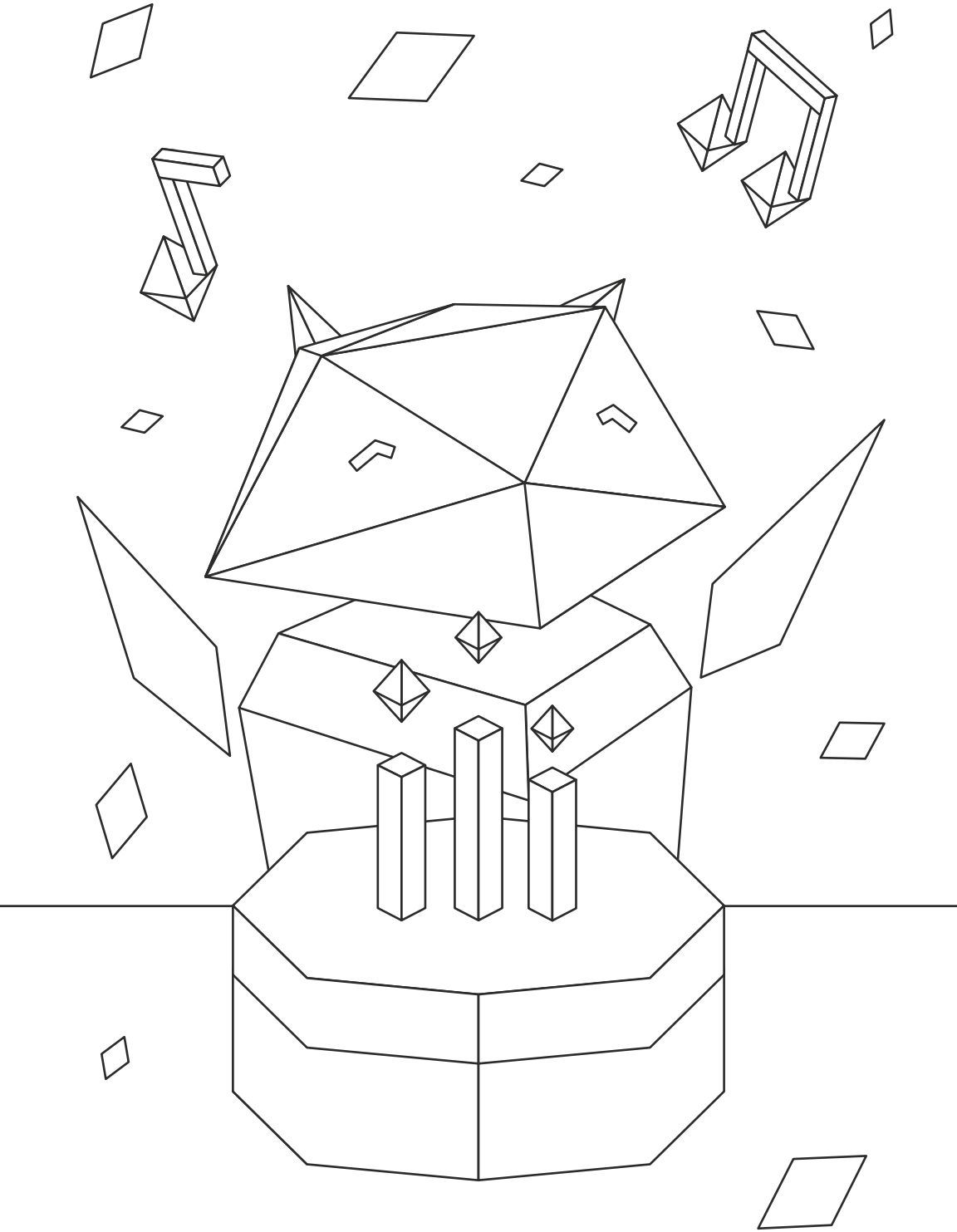

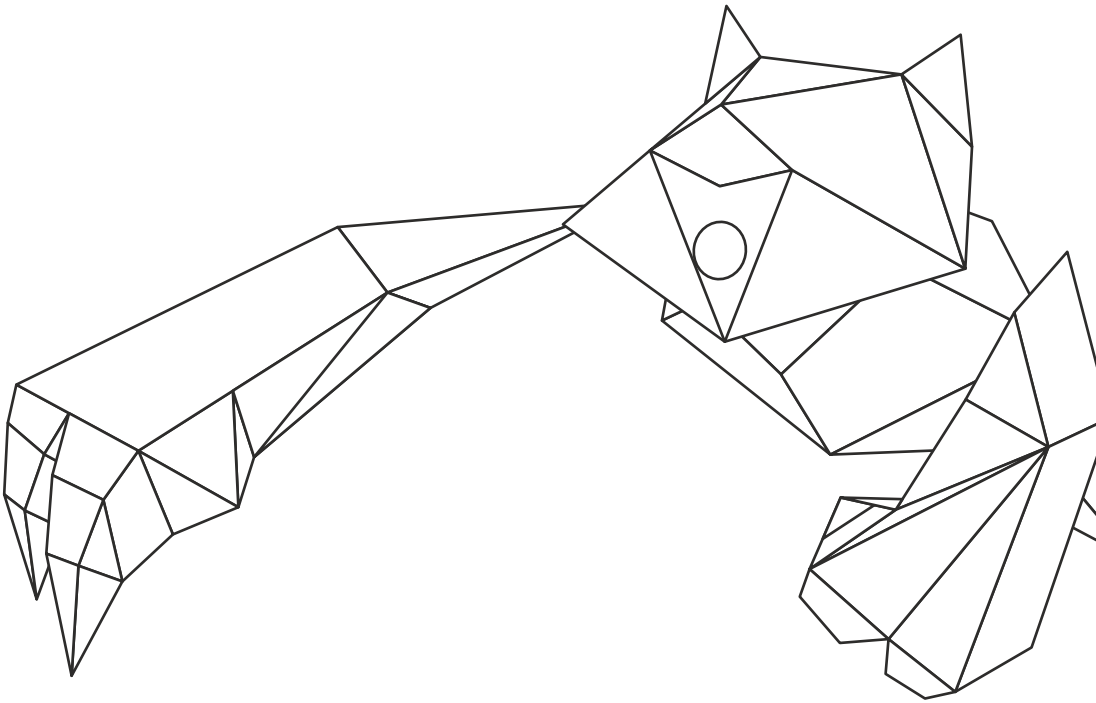

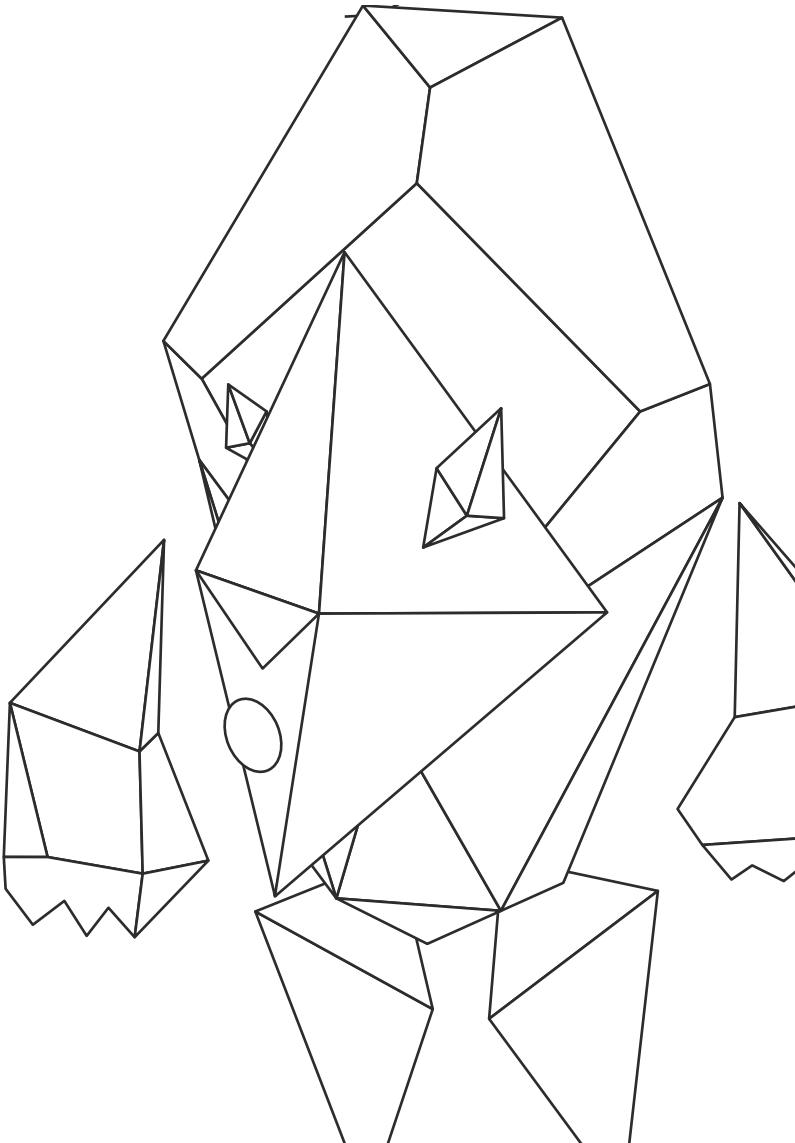

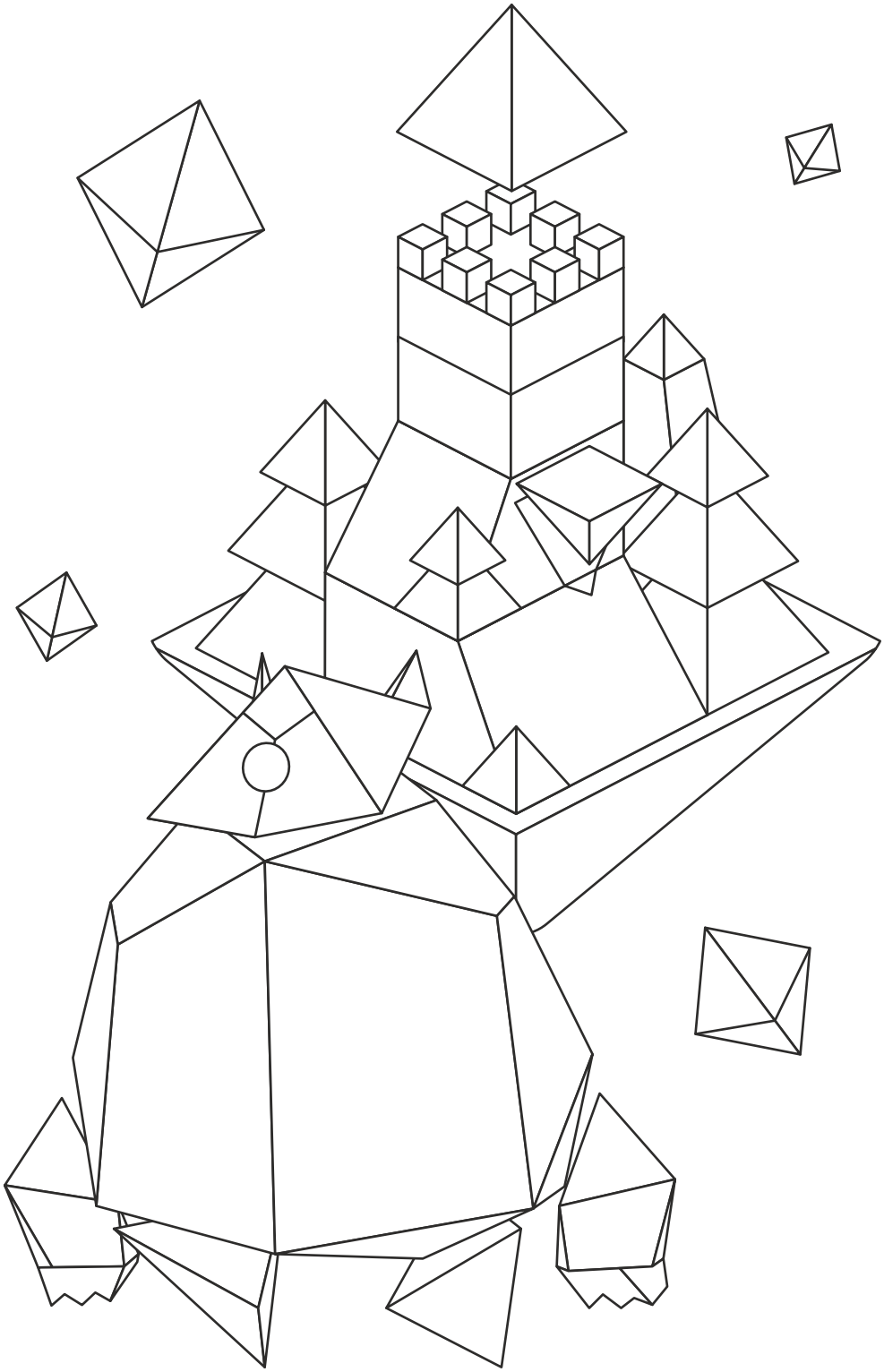

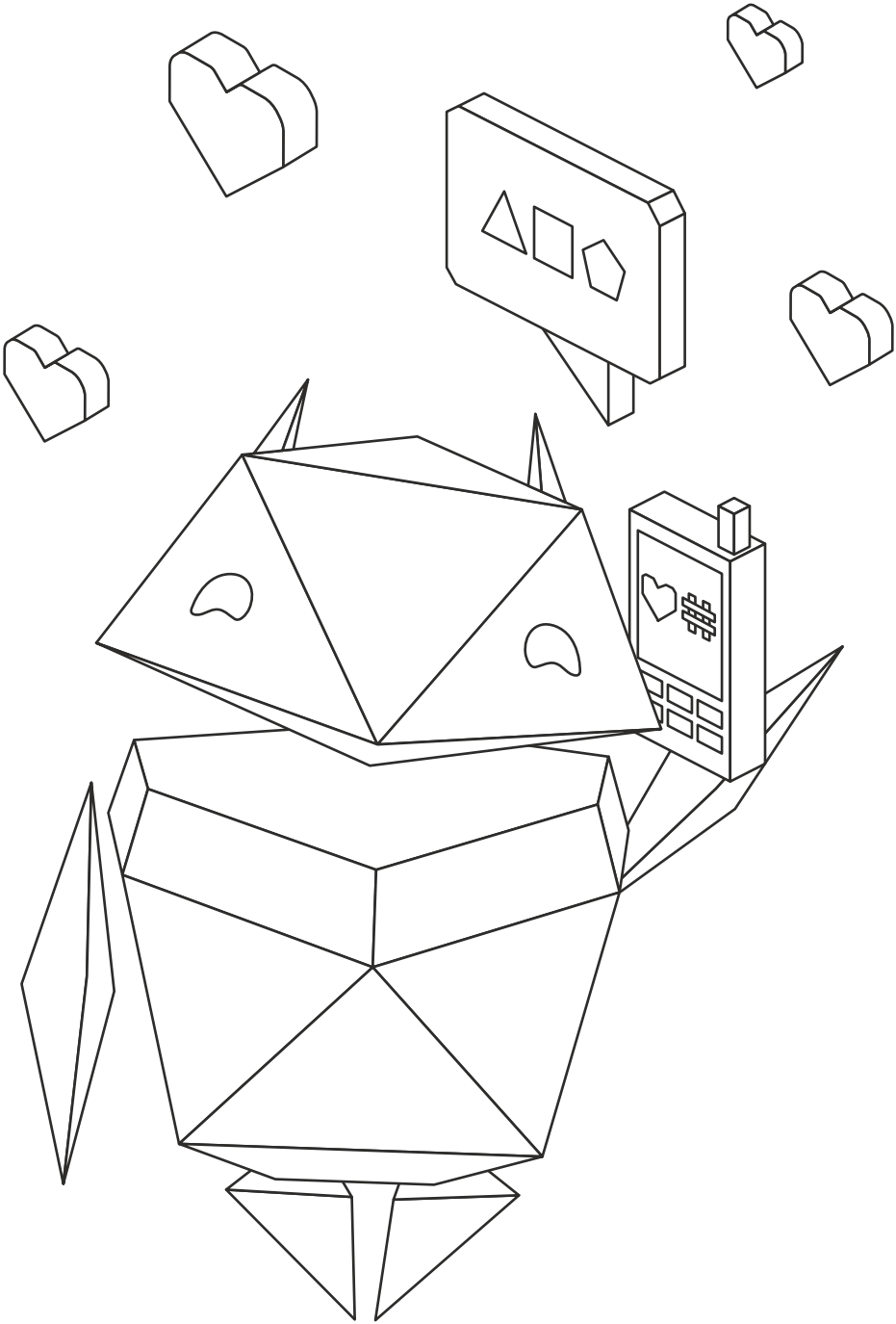

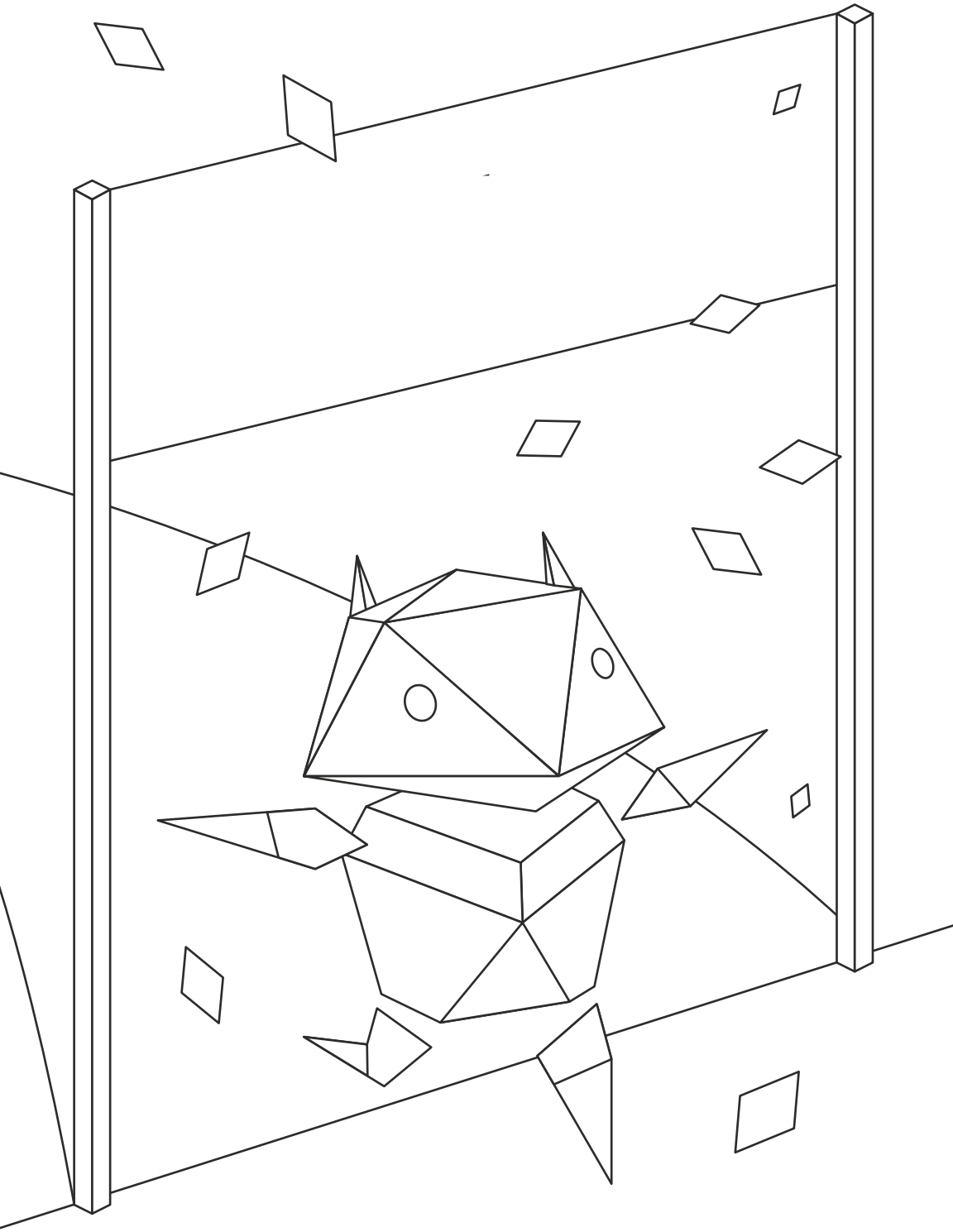

Google